BOILER DATA	
OPERATING VOLUME (USG)	810
OPERATING WEIGHT (LBS)	16200
HEAT IMPUT (MBH)	4090
OUTPUT (HP)	100

VENT FLANGE DIMENSIONS	
OD	20-1/8
ID	16
B.C.D.	18.5
NO. OF HOLES	8
HOLE DIAMETER	1/2

CONNECTION SCHEDULE

TAG	DESCRIPTION	CONNECTION		
		SIZE (INCH)	TYPE	RATTING
A*	CONTROLS	1-1/4	HALF COUPLING	3000#
B	STEAM OUTLETS	8	SORF FLANGE	150#
C*	SURFACE BLOWDOWN	3	FULL COUPLING	3000#
D	MANHOLE	12X16	ELLIPTICAL	
E	SAFETY RELIEF VALVE	3	FULL COUPLING	3000#
F*	REVERSING CHAMBER WASHOUT	3	FULL COUPLING	3000#
G*	CONDENSATE INLET	3	SORF FLANGE	150#
H	WASHOUTS	3	FULL COUPLING	3000#
J	REAR DOOR	16		
K*	LOW FIRE HOLD	1/2	FULL COUPLING	3000#
L*	FURNACE INSPECTION	3	FULL COUPLING	3000#
M	TUBE PULL	120		

*** - Owner chooses left/right installation**

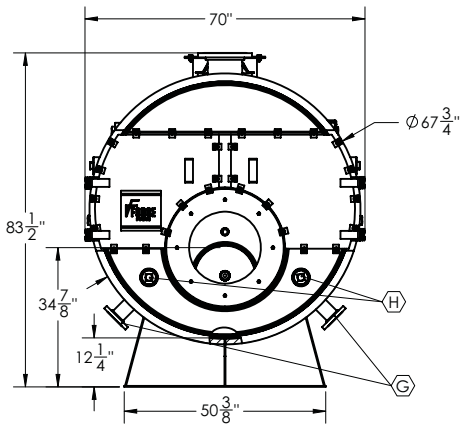

FRONT VIEW

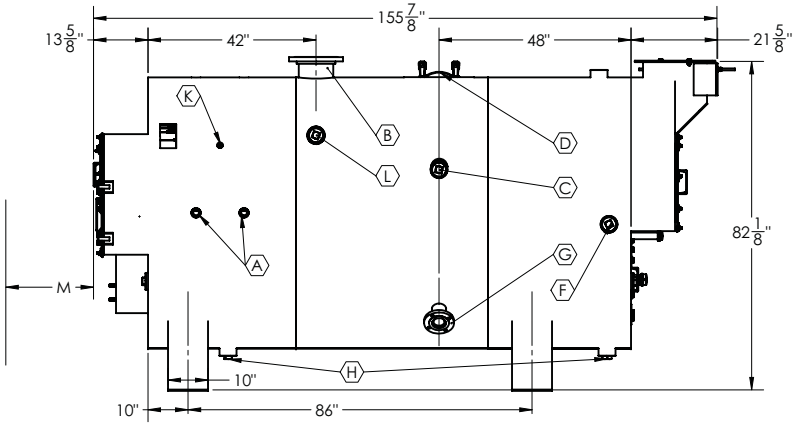

SIDE VIEW

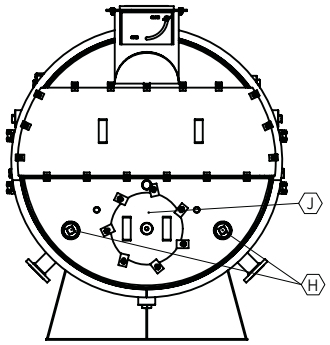

REAR VIEW

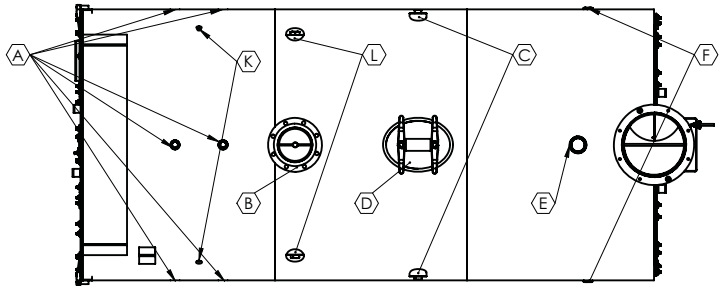

TOP VIEW

1. ADEQUATE BOIL OUT PROCEDURES MUST BE IMPLEMENTED BEFORE BOILER PLACED IN SERVICE (SEE OPERATION MANUAL).
2. PROPER WATER TREATMENT PROGRAM IS CRITICAL TO THE OPERATION OF THIS BOILER.
3. WARRANTIES, EXPRESSED OR IMPLIED, WILL BE RENDERED NULL AND VOID IF PROPER WATER TREATMENT PROGRAM IS NOT IMPLEMENTED AND MAINTAINED. CONSULT LOCAL WATER TREATMENT SPECIALISTS FOR DESIGN AND SUPPLY OF REQUIRED WATER TREATMENT SYSTEM
4. ALL DIMENSIONS FOR REFERENCE ONLY.

PROPRIETARY AND CONFIDENTIAL

THE INFORMATION CONTAINED IN THIS DRAWING IS THE SOLE PROPERTY OF FORCE POWER . ANY REPRODUCTION IN PART OR AS A WHOLE WITHOUT THE WRITTEN PERMISSION OF FORCE POWER IS PROHIBITED.

NEXT ASSY	USED ON
APPLICATION	

UNLESS OTHERWISE SPECIFIED:
DIMENSIONS ARE IN INCHES
TOLERANCES:
ANGULAR: ± 0.25°
TWO PLACE DECIMAL ± .010"
THREE PLACE DECIMAL ± .005"
SURFACE FINISH

INTERPRET GEOMETRIC TOLERANCING PER: ANSI Y14.5

MATERIAL SEE NOTE 1

FINISH SEE NOTE 3

DO NOT SCALE DRAWING

	NAME	DATE
DRAWN	SR	10/30/2015
CHECKED		
ENG APPR.		
MFG APPR.		
Q.A.		

COMMENTS:

FORCE POWER
30 Commerce Park Drive
Niskayuna, NY, 12309, USA
PH. (518) 377-2349, FAX (518) 344-7495

TITLE: TCS-100HS Boiler ASSY (3p)

SIZE C | DWG. NO. 51002_SM | REV --

SCALE: 1:48 | WEIGHT: 9809.393 | SHEET 1 OF 1

SW Component Name: D:\Working\51002\2000
SW Drawing Name: D:\Working\51002_SM